NO	DESCRIPTION	MATERIAL	Q'TY	FINISH	REMARK
1	BODY 1	PBT	1	PBT	B-FKR1348-C55
2	BODY 2	BRASS	1	NICKEL	B-FKR1834-N
3	BODY 3	BRASS	1	NICKEL	B-FKR1349-N
4	INSULATION 1	TEFLON	1	TEFLON	I-0656T
5	PIN	PH.BRONZ	1	GOLD	P-FKR1251-G
6	WASHER 1	BE CU	1	GOLD	W-0035
7	INSULATION 2	TEFLON	1	TEFLON	I-0066D

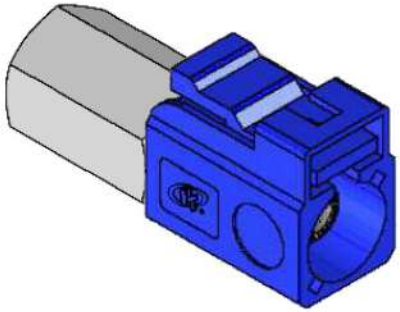

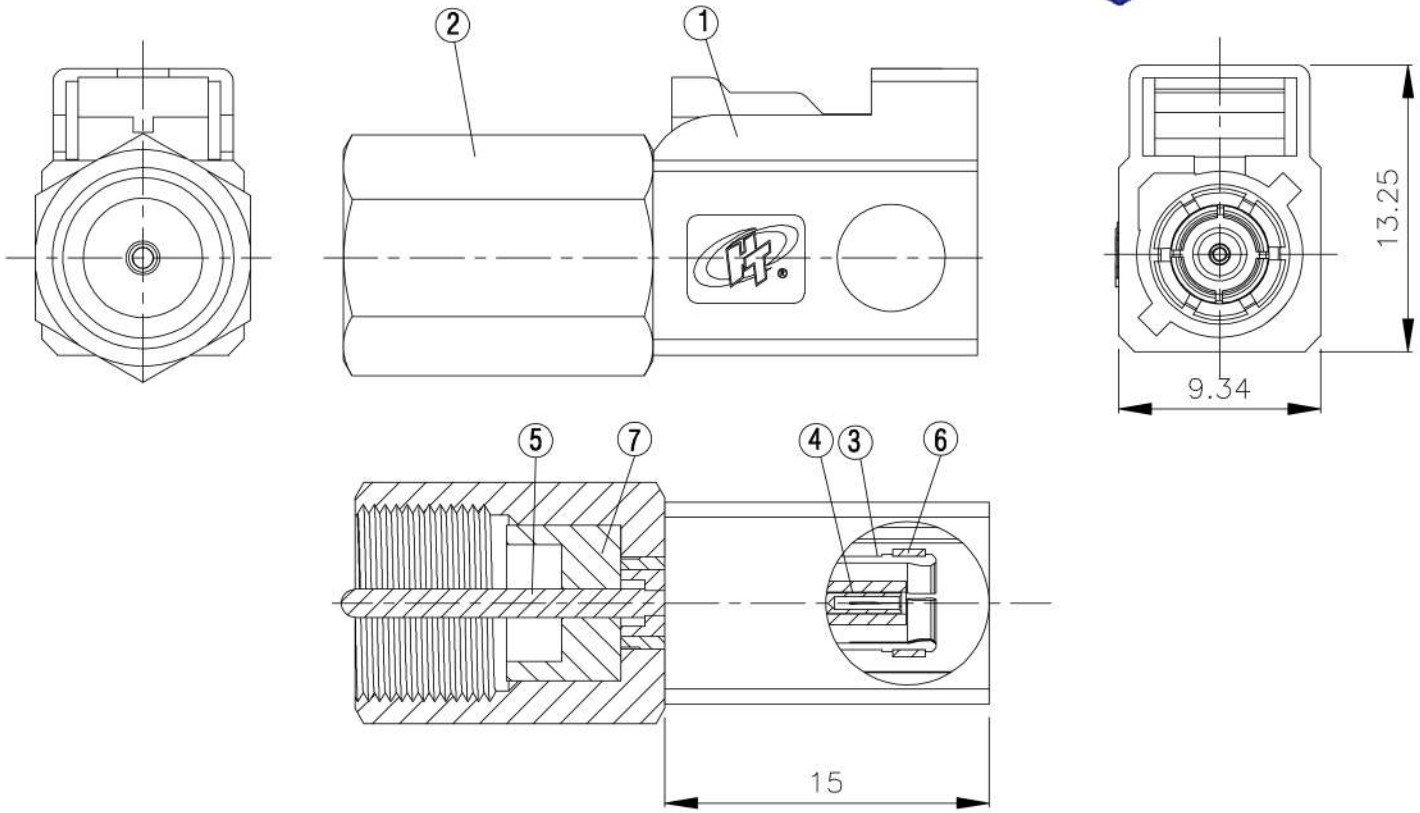

HUS-TSAN GROUP CO., LTD.
P.O.BOX 40-76.TAINAN.TAIWAN,R.O.C.

TITLE FAKRA FEMALE FME MALE ADAPTOR BLUE/C5005 藍色

PART NO. FKR-14-TGNPC

DRAWING NO. FKR-14-TGNPC

DRAWN	徐睿謙	DATE	102.12.12
CHECKED	林孟翰	DATE	
Q.A.	黃珏雯	DATE	
APPROVAL	徐燦霖	DATE	
REVISION		DATE	

DIMENSIONS ARE IN MILLMETERS

UNLESS OTHERWISE SPECIFIED TOLERANCE

0.5-5=±0.2	120-315=±1
5-30= ±0.4	315-1000=±1.6
30-120=±0.6	1000-2000=±2.4

SCALE 4:1 SIZE A

REVISION	
DESCRIPTION	ENGINEER